Cut-Out® Flares

INSTALLATION INSTRUCTIONS FOR

Ford Bronco, Toyota Landcruiser

20001/20002 (Front & Rear) 30002 (Rear)
20005 (Rear) Large Cut-Out®

TOOLS REQUIRED FOR INSTALLATION:

- □ Drill Motor
- □ 3/16" Drill Bit
- □ #2 Phillips Bit
- □ Marking Pen
- □ Sheet Metal Cutting Tool (Hacksaw, Sabersaw, Air Chisel, Metal Nibbler, or Air Saw)
- □ Tape Measure
- □ Jack Stands

IMPORTANT: READ BEFORE BEGINNING INSTALLATION

Bushwacker only approves installing the flares according to these written instructions with the hardware provided. **WARNING:** Failure to install according to these instructions will invalidate the warranty. This includes, but is not limited to using alternative installation methods, hardware, or materials. **DO NOT USE:** Loctite, SuperGlue, or similar products on the hardware or the flares

Warranty - Extensive sheet metal modifications are required to install these flares. These modifications will effect your vehicle manufacturer's warranty.
Performance - Using larger tires may increase the area required to turn the vehicle. Some Tire/Rim combinations may require lowering bump stops and/or installing steering stops to prevent tire shoulders from contacting flare.
Exhaust System - Modifications may be necessary to maintain a minimum 4" clearance between flares and exhaust pipes. Exhaust gases should not vent directly onto flares.
Metal Protection - All exposed fasteners and bare metal should be treated with red oxide primer. Spray inner fender wells with undercoating only AFTER flare attachments have been completed.

FLARE INSTALLATION PROCEDURES

Step 1: Verify Fit

(A) Flares should be held to the vehicle surface to verify correct type and fit BEFORE painting or installation. Small fit adjustments can be made by trimming (filing, sanding, or scraping) flashing or excess plastic.
(B) There may be factors beyond Bushwacker's control which will complicate installation, such as damage related to collisions, or other accessories such as running boards, etc.

Step 2: Painting

It is recommended that painting (when desired) be done prior to installation.
(A) Clean outer surface with Dupont #3919S Prep-Sol or equivalent. DO NOT USE LACQUER THINNER OR ENAMEL REDUCER AS A DEGREASER.
(B) A polypropylene primer (Ditzler DPX800 or equivalent) MUST BE USED to assure color coat adhesion. Use 3 coats of high fill primer and block sand.
(C) The color coat MUST HAVE A FLEX ADDITIVE (Ditzler DX369 or equivalent) added to prevent paint cracking.

Step 3: Preparation

(A) To work in the wheel well area, remove tire and any other obstructions.
(B) Firmly support vehicle using jack stands.

Step 4: Cutting Sheet Metal

(A) Place appropriate flare against correct fender.
(B) Use a marking pen to trace the outline of the flare onto the fender. See Diagram B.
(C) Remove flare and draw second line 1" inside the line marked in step 4B. See diagrams A and B. Cut the fender along this second line. Caution should be used to avoid cutting hydraulic, pneumatic, or electrical lines.

Step 5: Flare Attachment

(A) Fit flare into wheel well making sure flare contour matches sheet metal contour. Using pre-drilled holes in flare as guide, fasten with drill tip screws beginning at location 31 (see diagram d).
(B) Install gimp or edge trim as per instruction sheet provided. Note: Pre-drilled holes in flare can be used to determine proper hole locations in gimp.
(C) Secure flare and gimp to fender with drill screws. Make sure bottom edges are in place while fastening.

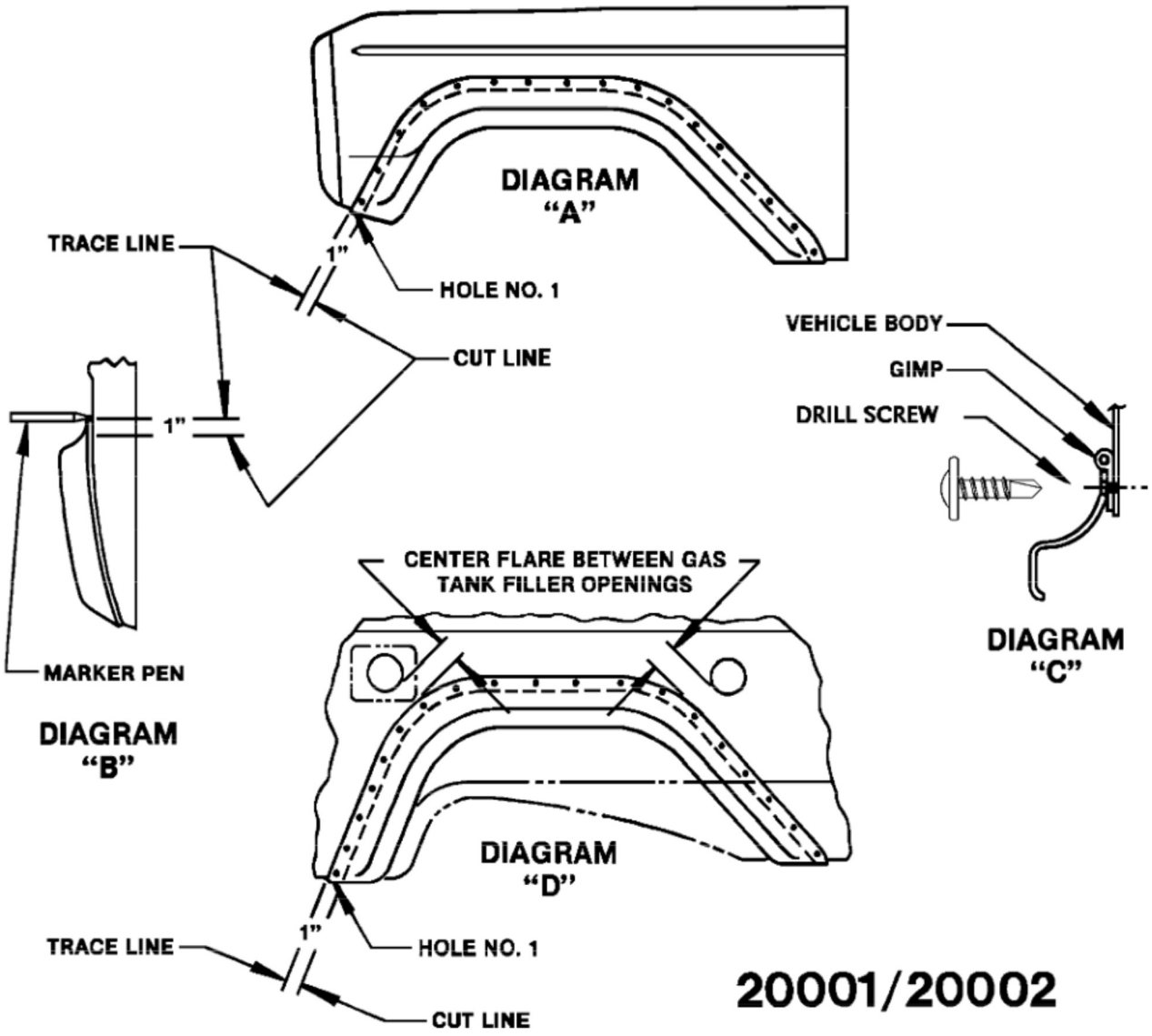

20001/20002

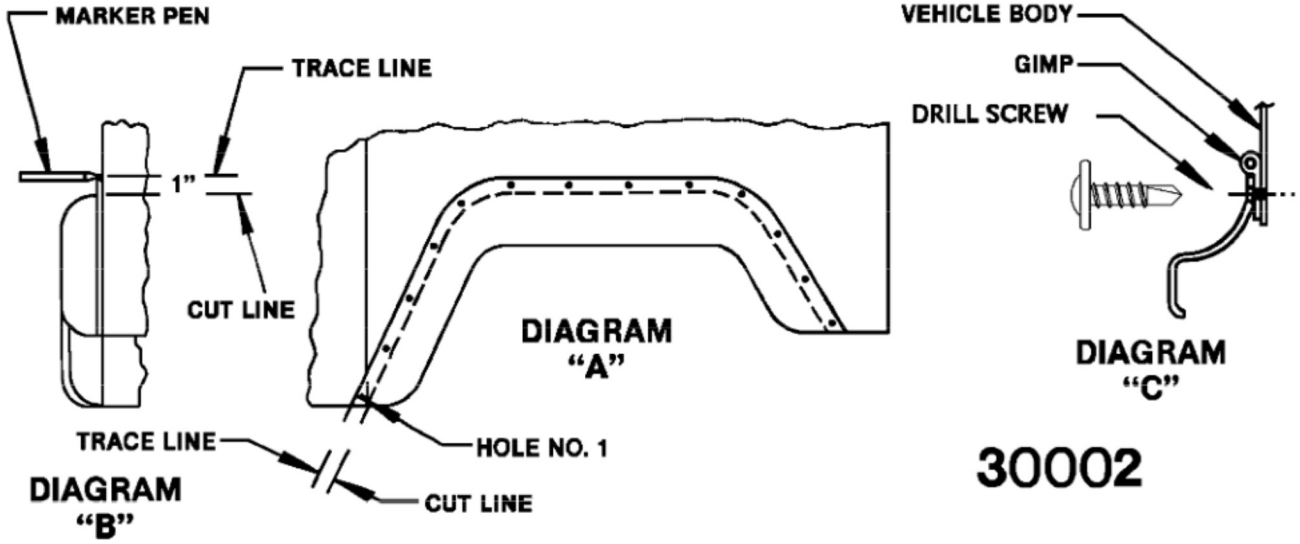

30002