20017
06-06-11
Rev-1

CUT OUT FLARES

INSTALLATION INSTRUCTIONS FOR

20017, 20018, F100-F150 F250-F350 P.U. & BRONCO CUT OUTS

Tools Required for Installation:

(A) Flat File
(B) Pop-Rivet Gun
(C) Air Chisel, Metal Nibbler or Sawzall
(D) Crescent Wrench
(E) Marking Pen
(F) Jack
(G) Jack Stands
(H) Tin Snips
(I) (2) C-Clamps
(J) Vise Grips
(K) Rustoleum Red Oxide Primer
(L) Small Paint Brush
(M) ¼ Drill Bit
(N) 5/16 Drill Bit

Bushwacker only approves installing the flares according to these written instructions with the hardware provided. **WARNING:** Failure to install according to these instructions will invalidate the warranty. This includes, but is not limited to using alternative installation methods, hardware, or materials. **DO NOT USE:** Loctite, SuperGlue, or similar products on the hardware or the flares

Caution: NO direct contact of exhaust or rear tail pipe on this product. A minimum of 4" Clearance required. Exhaust pipe modifications may be necessary.

Note:
1) Extensive sheet metal modifications required on all these flares. These modifications will affect your vehicle manufacturer's warranty. Turning radius of vehicle may be increased.
2) Tire/wheel size that be accommodated without a lift kit.
Wheel – 8½" or 10" wide with 3¾" back spacing
Tire – Radial type (rounded shoulder)
a) Stock front bumper – stock position 33"/8½" rim
b) Stock front bumper – moved forward 2" – 35"/10" rim
c) Aftermarket tube bumper that does not wrap around into wheel well opening 37"/10" or 12" rim.

Step 1: Painting

(A) Painting your flares prior to installation is recommended. Sanding is optional before painting. Clean outer surface with a quality degreaser. **Do not use** lacquer thinner or enamel reducer as a degreaser. Wipe outer surface thoroughly with a tack rag prior to painting. A lacquer, enamel or polyurethane base automotive paint is recommended. The use of a primer coat is optional.

Step 2: Disassembly (front) 20017

(A) Jack up vehicle and use jack stands.
(B) Remove wheel and wheel well trim (if so equipped).
(C) Remove body side moldings on fender only (if so equipped).
(D) Remove any molding script (F-150, Bronco, etc.) from fender that would interfere with flare.
(E) From outside of engine compartment, remove wire clips, coil, vacuum canister or anything else that would prevent wheel well liner removal.
(F) Remove screws that attach wheel well liner to fender lip, inner sheet metal, front and rear sheet metal flange.
(G) Remove entire wheel well liner.

Step 3: Cutting Sheet Metal (front) 20017

Note: This flare can be installed in one of two positions. First position: with stock bumper in the stock position *front inside* edge of flare in line with bumper. Second position: with stock bumper moved forward 2" or using tube bumper. Front *outside edge* in line with vertical seam running to parking light. See Illustration #1

(A) Place appropriate flare on fender and line front in position 1 or 2 as mentioned above. Using inner edge of flare as a guide, mark a line all the way around. See illustration #1.
(B) Remove flare and mark a line ¼" above line drawn in step 3A. This will be the cut line. If you're going to use a sawzall to cut the sheet metal, skip 3C.
(C) Mark all spot weld locations on return flange of fender with a punch. If you have a spot weld drill, drill all spot welds holding outer sheet metal to inner panel. If you don't have a spot weld drill, drill with 1/8" bit and then with a 5/16" bit.
(D) If you are using a sawzall to cut sheet metal, cut through both inner and outer panels on cut line. Make sure cut is 90° from vertical. If you are using a tool that can cut one panel at a time, make sure both cuts are in line. Place flare into cut-out to check fit. If necessary cut more sheet metal to gain proper clearance. De-burr and paint cut edge to prevent rust.

(E) Mark a line ½" up from cut line and all the way around. Plot holes' location as shown in Illustration #2. Drill through both outer and inner panels at (5) marked locations. Make sure to hold panels when drilling to prevent sheet metal flexing. Install spacers (supplied) between outer and inner panel. Secure with correct length fasteners. See Illustration #2 – for spacer fastener combination.; **Note: When securing fasteners do not distort outer sheet metal**. It may be necessary to grind plastic spacers to fit angle of panels.

(F) Using only outer sheet metal cut in step 3D, mark a line 1" up from roll under lip. Cut on this line. Trim the bottom 2" off both ends. Install between outer and inner panels. Mark location of (5) fasteners holding outer panel to inner panel.

(G) Remove and notch flange to clear (5) fasteners. Make cuts every 2" on flange to allow bending to new cut out contour. See Illustration #3. Place flange up 1/8" between outer and inner panel. Start at center, drill and rivet using steel rivet and back-up washer. Alternate from center until secured in ten locations. Maintain 1/8" up from cut out by bending flange to fit.

(H) Draw a cut line along ridge of wheel well liner. **Do not cut top mounting holes.** Draw a cut line 1" in at low front and 1" in from side. Cut along lines drawn with saw or snips. See Illustration #4.

(I) Re-install liner into opening. Secure with original fasteners. Starting at front, drill and rivet (steel rivets) filler strip to flange installed in step 3F. Continue to drill and rivet ten evenly spaced locations around flange. If necessary, trim filler strip to fit behind outer sheet metal. Again starting at front, drill and rivet (steel) inside edge of filler strip to wheel well liner. **Use back-up washer on opposite side.** Continue to drill and rivet ten evenly spaced locations around filler strip.

Step 4: Flare Attachment

(A) Fit flare into wheel well opening, making sure flare contour matches sheet metal contour. Using pre-drilled center holes as a guide, drill sheet metal with 9/64" bit supplied. Secure with aluminum rivet and cup washer under head. Continue riveting in an alternating pattern from center until all outside pockets are secured.

(B) Starting at underside center, drill and rivet (aluminum) flare to mounting flange at 9 evenly spaced locations. Finish riveting with (1) rear underside.

(C) Press trim caps onto outer rivet washers.

(D) Reinstall all wire clips, coil, and vacuum canister on wheel well liner.

(E) Trim body side moldings (if so equipped) to fit flush with flare and reattach.

(F) Repeat for opposite side.

Step 5: Disassemble (rear)

(A) Jack up vehicle and remove tire.

(B) Remove wheel well trim and side moldings (if so equipped).

(C) Remove (2) plastic wheel well liners.

Step 6: Rear Gas Door Modification

(A) Remove (2) screws holding gas door hinge to body.

(B) Remove rubber stop bumper and cut off bumper mount flush with body. Coat saw edge to prevent rust.

(C) Remove (3) screws, holding filler flange to body. Remove and discard plastic gas cap retainer. Remove C-clamp, holding filler neck to frame bracket. Push filler forward and mark (from back side) three mounting hole locations. Drill mark hole locations with ¼" drill. Reattach filler flange with stock fasteners. Adjust and secure C-clamp to filler neck and frame bracket.

(D) Using stock gas door hinge holes as a location guide, transfer hole locations to opposite side. **Note:** Hinge location isn't centered in opening; it is offset up in its original location, so it will be offset down in new location. Drill (2) holes with ¼" bit. Install and adjust door to be flush with surrounding sheet metal. Secure with original nuts. Install original bumper in short leg of bumper bracket (supplied). Use top hole of original hinge mount as the attachment point. Place a No. 10 washer (supplied) on either side of hold. Install bracket over washer and loosely secure with No. 10 screw and nut supplied. Adjust bracket so gas door is flush. Secure.

Step 7: Cutting Sheet Metal (rear)

(A) Mark a point 2¾" out from (front and rear) bottom of wheel well opening. Place flare over sheet metal. Align lower inside edges with points marked on sheet metal. Be sure bottom of flare (front and rear) is snug with turn under of sheet metal. Hold in place; using inner edge as a guide, mark a line on sheet metal all the way around. Remove flare and mark a line ¼" above line just drawn. This will be the cut line for outer sheet metal.

(B) Locate all spot welds on turn under lip of wheel well opening and drill through with 1/8" bit. Drill all points with 5/16" bit. This will separate the inner sheet metal with outer sheet metal. Cut outer sheet metal **only** on marked red line. Measure down 2½" from cut line and mark a line around inner panel. Cut around marked line. Starting at one end of inner panel, mark a line every 2" and back 3". If you are using a saw to cut these points, drill a 5/16" hole at the end of the cut to prevent cracking. Bend (with vise grips) 2" segment out toward sheet metal. Fold a ½" flange to rest against inside of outer sheet metal. **Do not push outer panel in or have inner panel pushing out.** This will distort outer sheet metal and affect fit of flare. Holding the two panels together, drill and rivet (steel rivet) in 2 places. Use a back up washer on inside. See Illustration #5. Do this at each segment.

(C) Another method to accomplish step 7B is to trim both panels in line and weld 6 evenly spaced 2" wide braces between. Paint will show heat spot from weld, but flare will cover. See Illustration #6.

(D) Whether step 7B or step 7C method is used, de-burr and coat all raw cut edges and/or heat spots to prevent rust.

(E) Bottom front stock fender brace must be relocated from bed bracket to frame rail. This will allow more tire clearance. Remove bed bracket fastener. Attach extension supplied with 5/16" screw and nut. Swing bracket forward and bend to sit flat on top of frame rail. Secure with 5/16" screw and nut supplied. See Illustration #7.

(F) Loosely assemble 2 of the outer sheet metal support brackets. Install to front of wheel well opening and place inside leg, in pinch seam of bed, to inner panel. Outside leg will rest against inside of outer sheet metal and be ¼" forward of cut line. Mark hole location of bracket onto outer sheet metal and pinch seam. Remove bracket and drill marked locations with ¼" drill. Reinstall bracket and secure with No. 10 screw and nuts. Secure screws holding brackets together. **Note: Do not distort outer sheet metal when securing bracket as this will affect fit of flare.** See Illustration #7.

Step 8: Cutting Gas Door(s)

(A) If vehicle is equipped with two gas doors, both will be trimmed to clear flare.

(B) Place flare into cut-out wheel well opening and adjust for proper fit. Using outside edge of flare as a guide, mark a line across gas door(s) where flare intersects. Remove flare. Remove gas door(s) and mark a line 1/8" above previously marked line. This will be the cut line. Cut along cut line. De-burr and coat cut edge to prevent rust. Apply edging (provided) over cut edge. Pull release liner as you are applying and press out tape. Trim ends as required. Reinstall gas door(s) and adjust to fit flush with surrounding sheet metal.

(C) Front gas door will open by pressing at forward edge. Rear gas door will open by pressing at trailing edge.

Step 9: Flare Attachment

(A) Fit flare into wheel well opening, making sure flare contour matches sheet metal contour. Using pre-drilled center hole as a guide, drill sheet metal with 9/64" bit supplied. Secure with aluminum rivet and cup washer under head. Continue riveting in an alternating pattern from center until all outside pockets are secured. Finish with (2) rivets at underside front and rear legs.

(B) Press trim caps on to cup washer.

(C) Re-install (2) plastic wheel well liners using stock fasteners. Trim liners as required and tuck behind fender flare.

(D) Trim body side molding (if so equipped) to fit flush with flare and reattach.

(E) Plastic gas cap in rear gas door opening may have to be modified by grinding outer band down. This will make it easier to get the cap on and off in the small space.

(F) Repeat for opposite side.

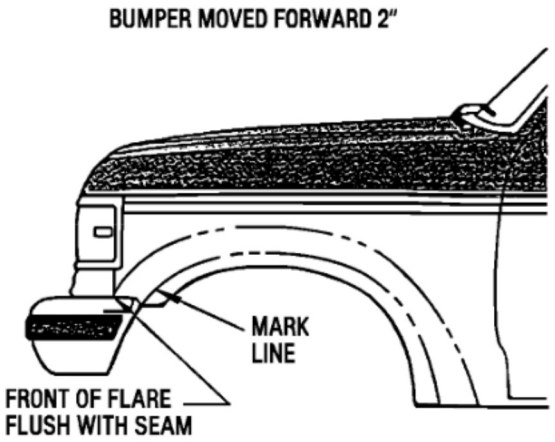

ILLUSTRATION #1

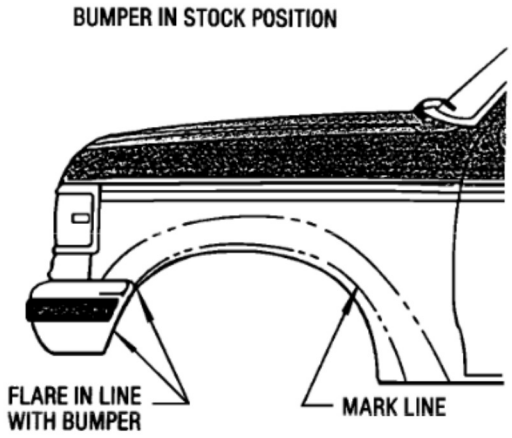

ILLUSTRATION #1

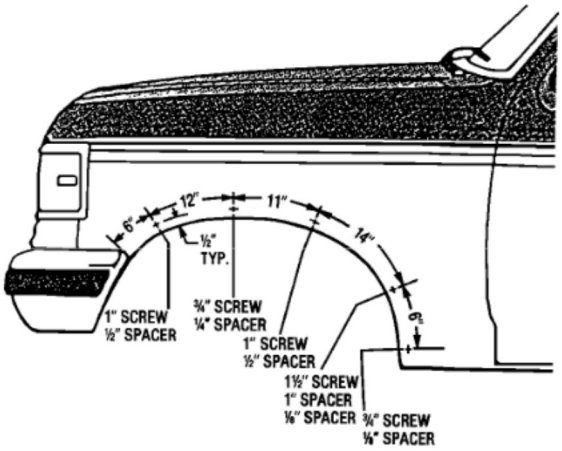

ILLUSTRATION #2

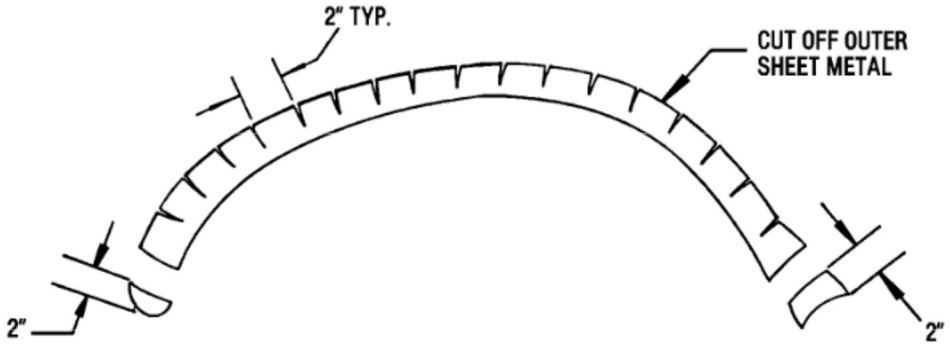

ILLUSTRATION #3

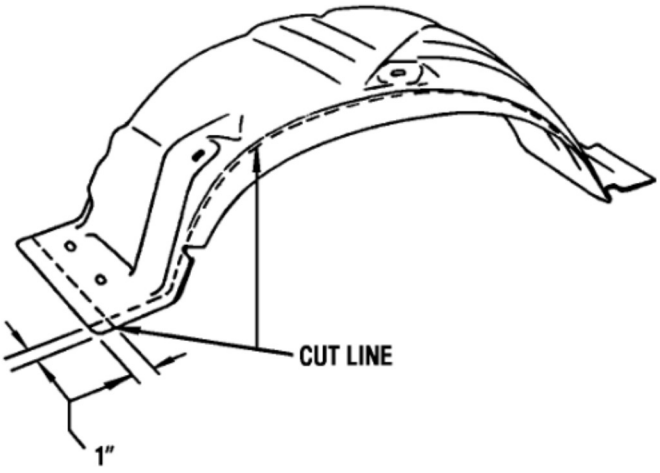

ILLUSTRATION #4

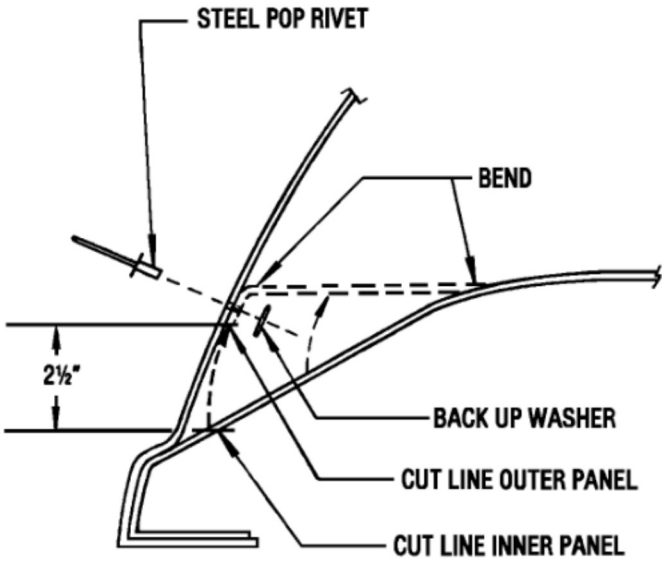

ILLUSTRATION #5

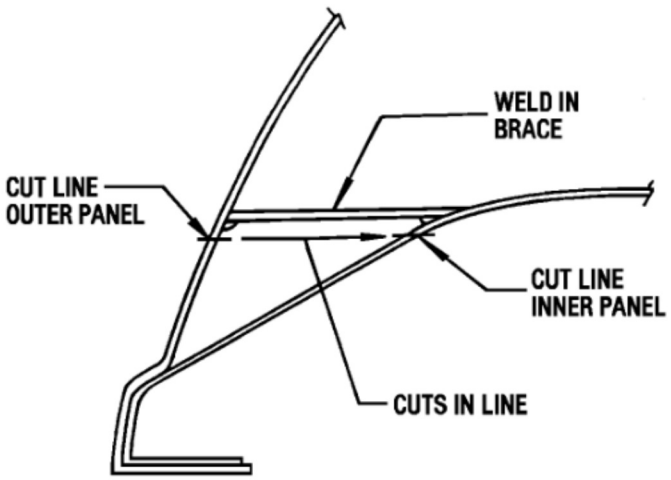

ILLUSTRATION #6

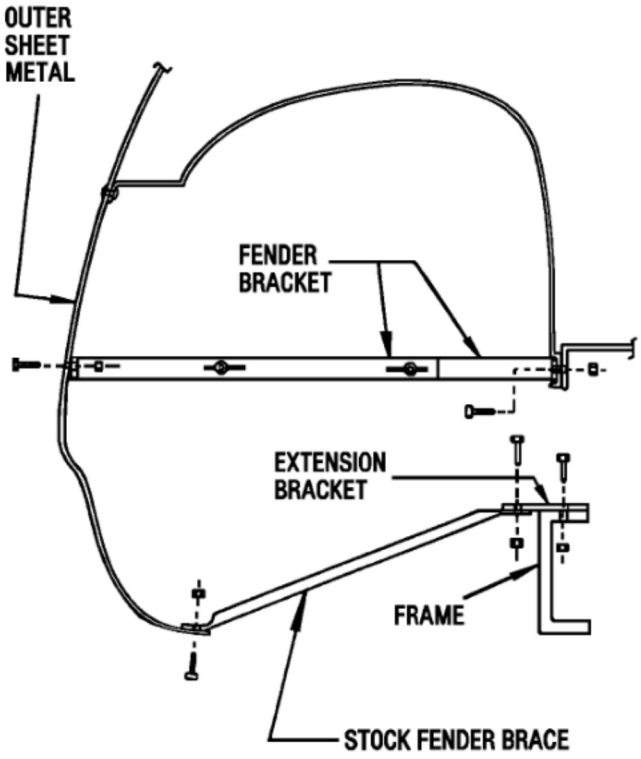

ILLUSTRATION #7